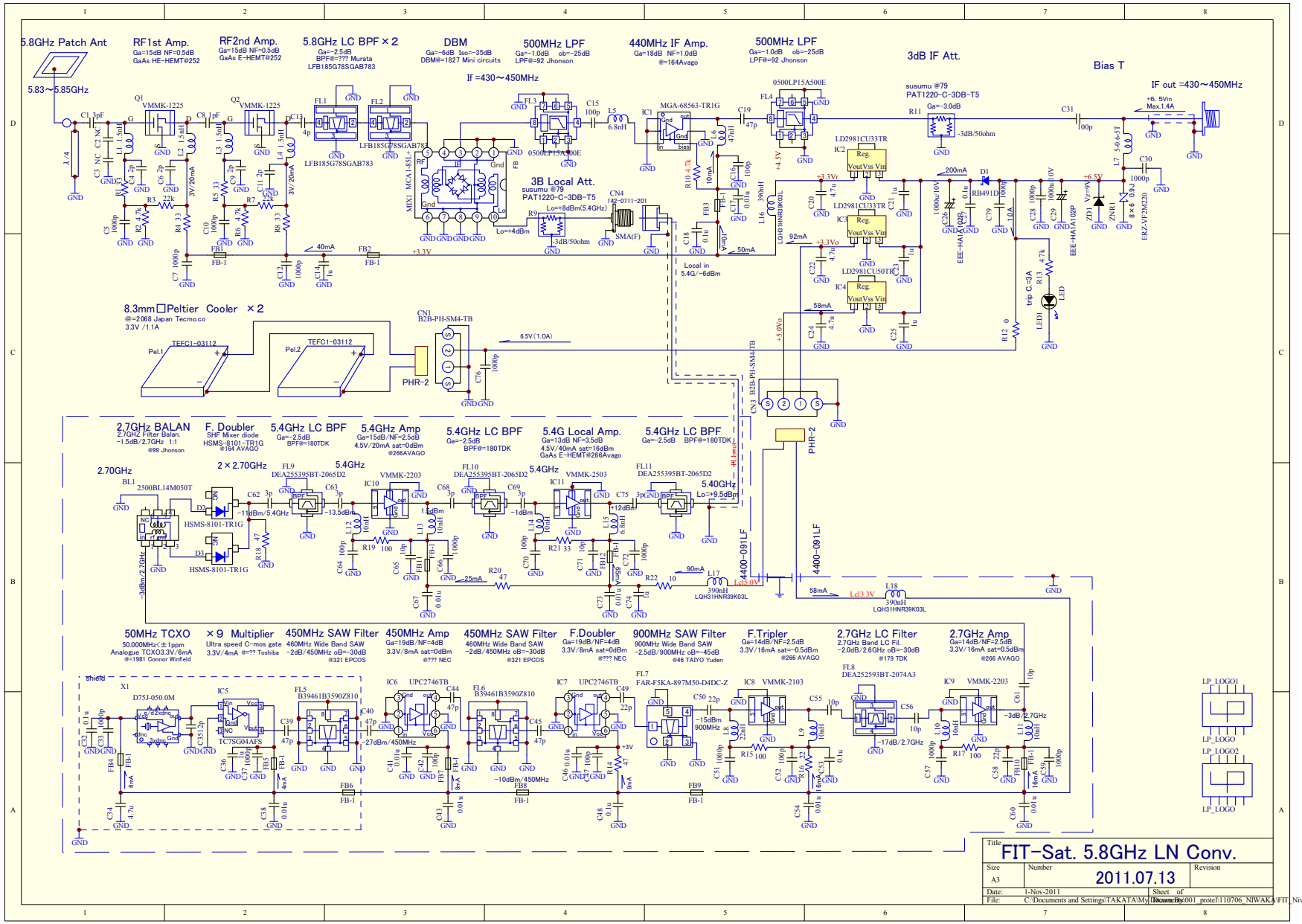

Title: FIT-Sat. 5.8GHz LN Conv.

Size: A3 | Number: 2011.07.13 | Revision

Date: 1-Nov-2011 | Sheet of

File: C:\Documents and Settings\TAKATA\My Documents\001_protel\110706_NIWAKA\FIT_NiwakaSatellite.ddb